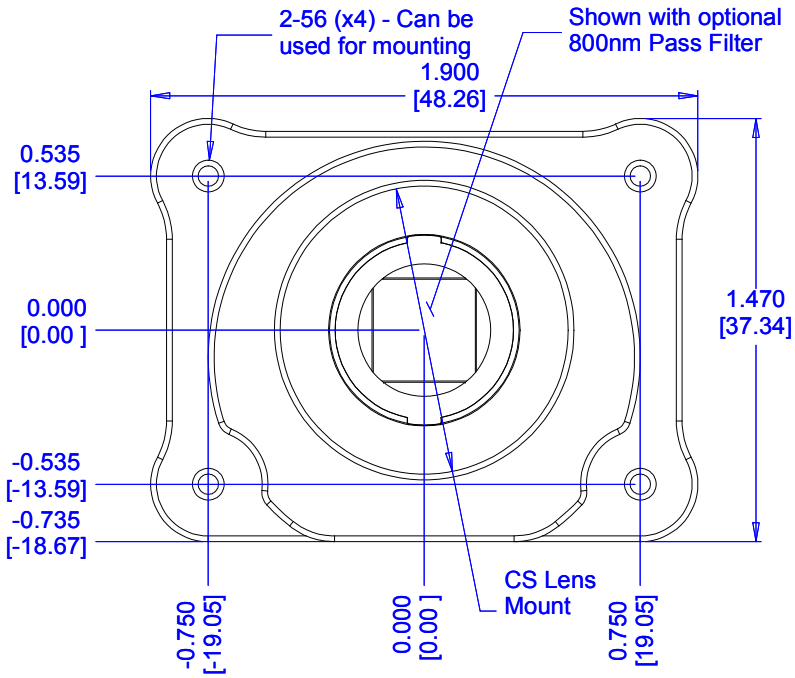

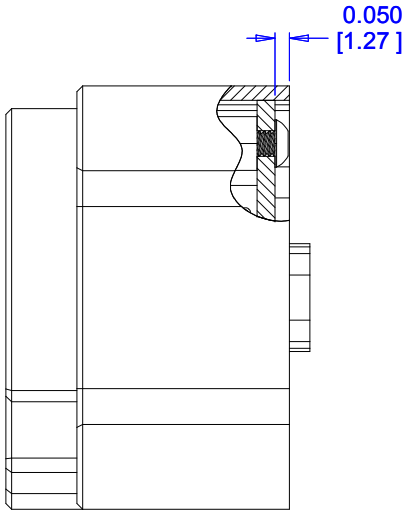

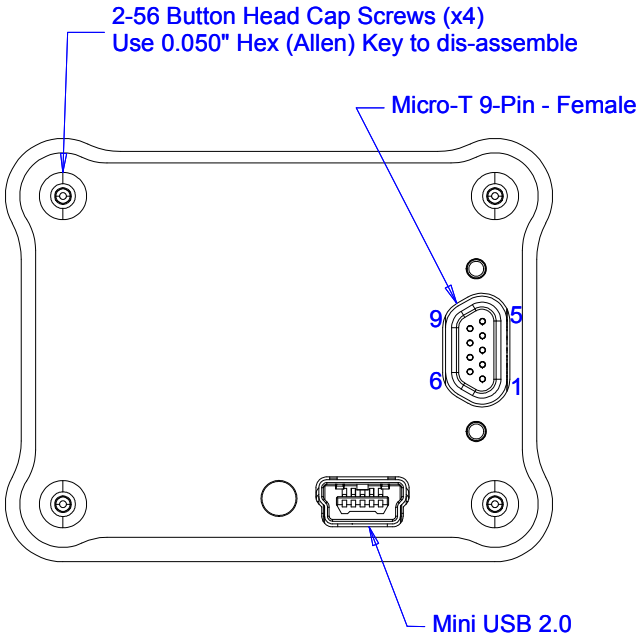

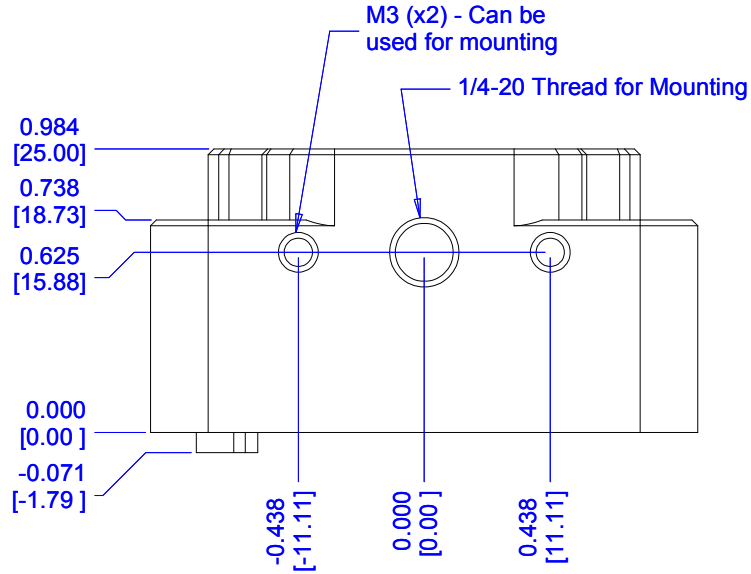

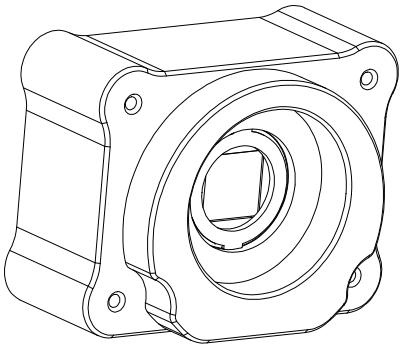

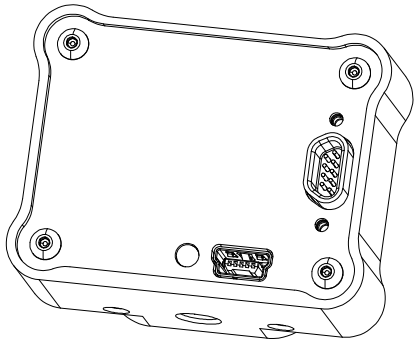

SCALE: 3:2
INCH [MM]

SLIM Enclosure
OptiTrack V120:SLIM
NaturalPoint
2-5-10